DESIGN OPTIMIZATION AND PERFORMANCE EVALUATION OF ER DOPED AND ER-YB CO-DOPED FIBER AMPLIFIER CONSIDERING ION-ION INTERACTION EFFECT

[1]MD SOHEL MAHMOOD, [2]MOHAMMAD SAKIB MAHMOOD, [3]SAMIA JANNAT

[1,3]Department of Electrical Engineering, University of Texas at Arlington, Arlington, TX USA 76019
[2]Department of Electrical and Electronic Engineering, American International University-Bangladesh, Dhaka, Bangladesh
E-mail: [1]md.mahmood@mavs.uta.edu, [2]mdsakibmahmood@ieee.org

Abstract- Efficiency of fiber amplifier can be increased by doping with rare earth elements but ion-ion interaction effect limits the gain. This paper reviews the design and performance of Er and Er-Yb doped fiber amplifier.

Keyword- Er-doping, Er-Yb co-doping, ion-ion interaction effect, upconversion effect.

I. INTRODUCTION

Optical fiber is one of the essential components of today's hi-tech communication system. For information transfer over long distance, amplifiers are necessary in between the transmitter and receiver. Semiconductor optical amplifier, Raman amplifier and rare earth doped fiber amplifier (REDFA) have been effective in this regards. Among the doped fiber amplifiers (DFA), Erbium (Er) doped amplifier is very promising because of its large dynamic range of operation and capability of transferring power more efficiently from pump to signal (>50%) [1].

II. DOPED FIBER AMPLIFIER DESIGN

Doped fiber has several optical and electrical parameters to be optimized. Doping density is a critical parameter since increasing the dopants beyond a certain amount can lead to clustering [2, 3] and consequently deteriorating the gain. Doping radius has profound impact [4] on the performance since it may change additional absorption of the signal. Fiber length and input wavelength are also required to be adjusted for higher gain [5]. Performance degradation of EDFA can be attributed to two major phenomena namely homogeneous upconversion (HUC) and inhomogeneous upconversion (IUC) effect [3]. A schematic of the model under study is shown in Fig. 1.

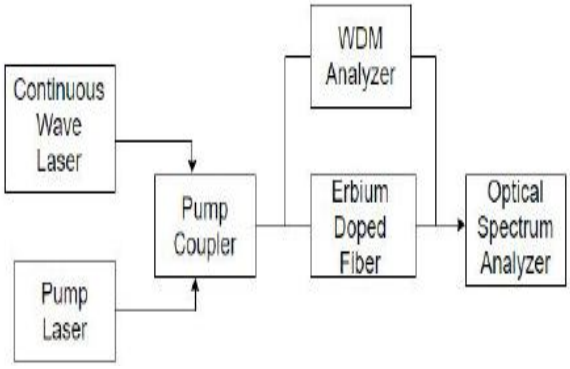

Fig. 1. Schematic of the model for optimization

III. PERFORMANCE SIMULATION

All the optimization simulations were performed in Optisystem® software. The pump wavelength and the power were set at 980 nm and 50 mW respectively. Three different Er dopant densities were chosen at 300 ppm-wt, 700 ppm-wt and 1000 ppm-wt. The fiber length was fixed at 20m except the length variation simulation. Doping radius is crucial since additional absorption of the signal depends on the extent of doping radius. Fig. 2(a) illustrates variation of gain with Er doping radius. At high concentration, the gain drops due to the formation of clusters. The upconversion effects were considered throughout the simulations. Homogeneous upconversion coefficient was set at 10^{-23} m^3/s. Higher the Er concentration, smaller the radius at which gain is maximized.

Since optimal length of the fiber depends on the pump power, the power was set at 50 mW and length is varied as shown in Fig. 2(b). Highly doped but shorter length of fiber provides same gain as lightly doped but longer fiber. As displayed in Fig. 2(c), signal wavelength can also have an impact on the performance.

As far as EDFA is concerned, 1530 nm wavelength is optimal for different doping concentrations. The individual and combined ion-ion interaction effects are compared in Fig. 3. 1530 nm signal yields in maximum gain and the gain degradation can be attributed to mostly inhomogeneous upconversion considering 2 ions per cluster at 10% relative number of clusters. Er concentration at 700 ppm-wt results in better gain (Fig. 3(b)) but higher concentration deteriorates the performance as shown in Fig. 3(c). Nonlinearity arises in EDFA as the gain increases. To minimize this effect, Ytterbium (Yb) is co-doped in fiber with Er. Fig. 4(a) and Fig. 4(b) show the fiber performance when these doping concentrations are varied. Fig. 4(c) demonstrates the peak power at 1530 nm wavelength. In all cases, dispersion of -20 ps/nm/km was included.

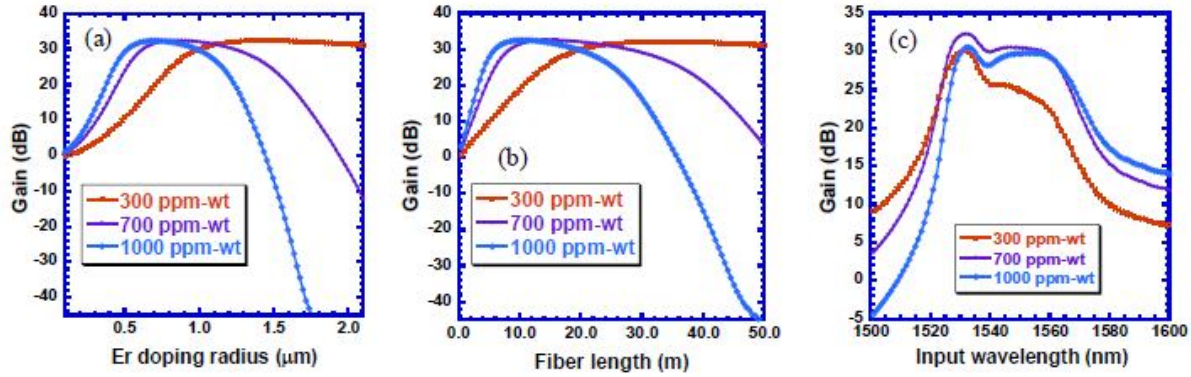

Fig. 2. Gain as a function of (a) Er doping radius, (b) fiber length and (c) input wavelength at three different concentrations of Er.

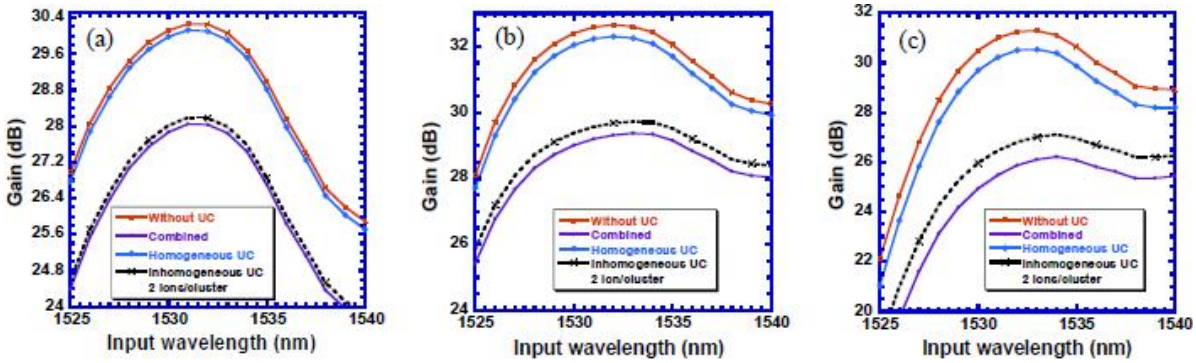

Fig. 3. Comparison of Er doped fiber considering ion-ion interaction at Er concentration of (a) 300 ppm-rt, (b) 700 ppm-rt and (c) 1000 ppm-wt

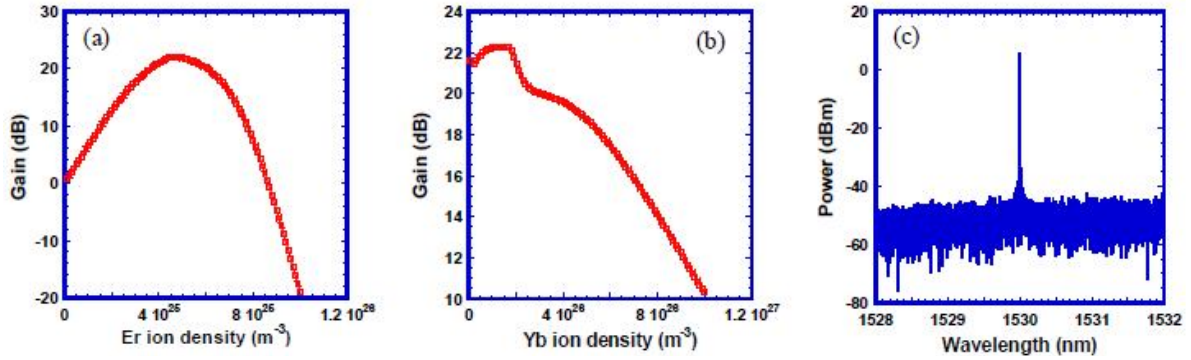

Fig. 4. Performance evaluation of Er-Yb doped fiber. (a) Gain is maximized at Er concentration of 4.1x1025 m-3 when Yb is fixed at 4.1x1026 m-3, (b) similarly gain is also maximized at Yb concentration of 2x1026 m-3 when Er is fixed at 4.1x1025 m-3 and (c) noise spectrum.

IV. DISCUSSION

Fiber with 700 ppm-wt of Er dopants is effective for 20m considering the gain performance. Since inhomogeneous upconversion effect is dominant over its counterpart, Yb co-doping helps to reduce the number of clusters.

REFERENCES

[1] M. Norouzi et al., "A survey on rare earth doped optical fiber amplifiers," in Proc. IEEE, EIT 2013, Rapid City, SD, 2013, pp. 1-11

[2] H. L. An, E. Y. B. Pun, X. Z. Lin and H. D. Liu, "Effects of ion-clusters on the intensity noise of heavily erbium-doped fiber lasers," in IEEE Photonics Technology Letters, vol. 11, no. 7, pp. 803-805, July 1999.

[3] J. A. Valles et al., "Dynamic Characterization of Upconversion in Highly Er-Doped Silica Photonic Crystal Fibers," in IEEE Journal of Quantum Electronics, vol. 48, no. 8, pp. 1015-1022.

[4] Afsal S. et al., "A novel approach for the enhancement of Fiber optic communication using EDFA," in 2016 WiSPNET, Chennai, 2016, pp. 23-27.

[5] M. Z. Amin and K. K. Qureshi, "Er^{3+}-Er^{3+} interaction effects and performance evaluation of Erbium Doped Fiber amplifiers," in IEEE CCECE, Halifax, NS, 2015, pp. 1383-1386.

★★★